ELite-LED HO

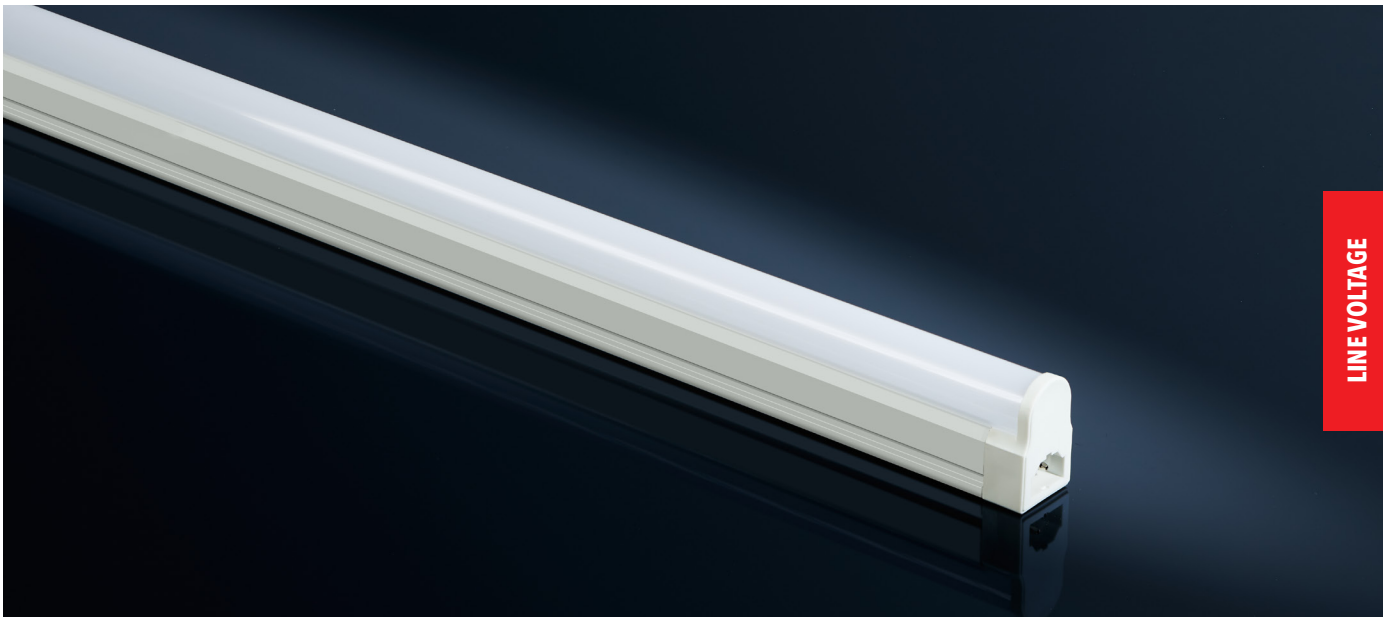

Product Description

High Output, High Efficacy, Economically Priced LED Light Fixture with Integrated Driver.

ELite-LED HO is a high output and high efficacy T5 LED light fixture with integrated driver and versatile connecting options, making it ideal for new installations or retrofits. The extremely high light output makes the ELite-LED HO the perfect solution for large areas which require a lot of light.

Product Features

- Available sizes:
  - 1′ (6 W)
  - 2′ (11 W)
  - 3′ (16 W)
  - 4′ (20.5 W)
  - 5′ (26 W)
- Available color temperatures:
  - 3500 K
  - 4000 K
  - Additional color temperatures (special order)
- 120 Vac LED with integrated electronic driver
- DLC 6.0 QPL Listed for 3500 K
- Interconnect up to 400 W of mixed sizes in one run
- Line Voltage Dimmable with compatible LED wall dimmer
- Finish: White housing with frosted lens
- Fixtures interconnect directly or with connecting cables
- Optional hardwire box available
- Magnetic mounting clips are available
- 277 V option available by special order
- 50,000 hours usable life
- Good CRI >80
- Efficacy >119-166 lm/W











Available Options

Necessary Accessories on Page 14

MODEL	LENGTH	POWER	LIGHT OUTPUT	EFFICACY	CRI	MAX CONNECTED	PART NO. (3500 K)	PART NO. (4000 K)
ELite-LED HO 1′	11"	6 W	715 Lm	119 lm/W	>80	83 pcs	EL/LED/12/3500/277/HO	EL/LED/12/4000/277/HO
ELite-LED HO 2′	21 3/16"	11 W	1433 Lm	130 lm/W	>80	45 pcs	EL/LED/22/3500/277/HO	EL/LED/22/4000/277/HO
ELite-LED HO 3′	33"	16 W	2150 Lm	134 lm/W	>80	31 pcs	EL/LED/34/3500/277/HO	EL/LED/34/4000/277/HO
ELite-LED HO 4′	44 13/16"	20.5 W	2850 Lm	139 lm/W	>80	24 pcs	EL/LED/46/3500/277/HO	EL/LED/46/4000/277/HO
ELite-LED HO 5′	56 5/8"	26 W	3550 Lm	137 lm/W	>80	19 pcs	EL/LED/59/3500/277/HO	EL/LED/59/4000/277/HO

Dimensions

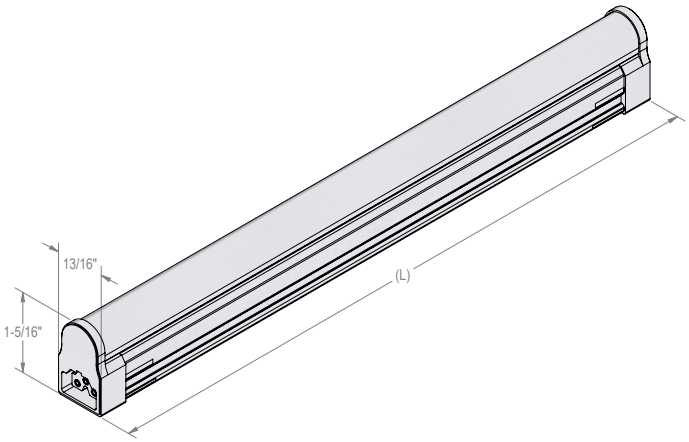

Line Voltage Accessories

ELite-LED / ELite-LED HO

Power Cords

FINISH	LENGTH	PART NO.
White	12"	EL/LED/PC12
White	36"	EL/LED/PC36
White	48"	EL/LED/PC48
White	72"	EL/LED/PC72
White	96"	EL/LED/PC96
White	132"	EL/LED/PC132
White	144"	EL/LED/PC144
Black	144"	EL/LED/PC144/BL
White, 90 Deg. Up	72"	EL/LED/PC72/90
White, 90 Deg. Up	144"	EL/LED/PC144/90
White, with switch	96"	EL/LED/PC96/S2

Connecting Cables, 90 degree Plugs

FINISH	LENGTH	PART NO.
White, 90 Deg. Up	6"	EL/LED/CC6/90
White, 90 Deg. Up	12"	EL/LED/CC12/90
White, 90 Deg. Up	24"	EL/LED/CC24/90
White, 90 Deg. Up	36"	EL/LED/CC36/90
White, 90 Deg. Up	48"	EL/LED/CC48/90
White, 90 Deg. Up	72"	EL/LED/CC72/90
White, 90 Deg. Up	96"	EL/LED/CC96/90
White, 90 Deg. Up	144"	EL/LED/CC144/90
White, 90 Deg. Down	6"	EL/LED/CC6/SP
White, 90 Deg. Down	12"	EL/LED/CC12/SP
White, 90 Deg. Down	24"	EL/LED/CC24/SP

Connecting Cables, Straight Plugs

FINISH	LENGTH	PART NO.
White	3"	EL/LED/CC3
White	6"	EL/LED/CC6
White	12"	EL/LED/CC12
White	24"	EL/LED/CC24
White	36"	EL/LED/CC36
White	48"	EL/LED/CC48
White	72"	EL/LED/CC72
White	96"	EL/LED/CC96
White	144"	EL/LED/CC144
Black	6"	EL/LED/CC6/BL
Black	12"	EL/LED/CC12/BL
Direct Connector		EL/LED/DC

Optional Accessories

ACCESSORIES	PART NO.
Hardwire Box	EL/LED/HWB
Hardwire Box, switch	EL/LED/HWB/S
Mounting Clip with screw	EL/LED/MC
Magnetic mounting clip	EL/LED/MC/MAGNET
Magnetic mounting clip, 90 Deg.	EL/LED/MC/90/MAGNET

Design and technical specifications may change without advance notice. Information is accurate at the time of publication.