OC Switch



SWITCHES

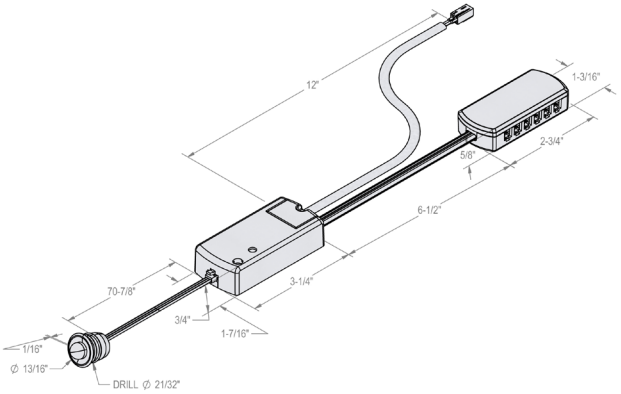

Part No. PS24V/SW/OC

Product Description

Low Voltage Occupancy Sensor Switch

Product Features

- Human body detection sensor
- Detection range: Maximum 8′
- Detection angle: 80°
- Detection time: 10 sec – 3 min
- Connects to the output of PS24V driver
- An occupancy sensor switch
- Larger detection range than IR switch, up to 98", (2.5m)
- Max 60 W LED load at 24V
- Adjustable on-time 10 sec – 3 min

Product Details

Design and technical specifications may change without advance notice. Information is accurate at the time of publication.